Operating Instructions

#505 Connector Cable Set

For use with the Meade® AutoStar™ Computer Controller

The #505 Connector Cable Set provides access to three AutoStar operations:

- **Telescope Control:** Use a personal computer (PC) to directly control a Meade AutoStar-compatible telescope through the use of an astronomical software program with telescope control capabilities such as Meade AutoStar Suite Software.
- **Download from a PC:** Download a new version of the AutoStar software or object information (*e.g.*, new satellite orbital parameters) from the Meade web site (***www.meade.com***) through a PC to AutoStar.
- **Download and Clone from AutoStar:** Transfer user-defined object information or new AutoStar software from one AutoStar Computer Controller to another.

PARTS LIST

The #505 Connector Cable Set is supplied with the following:

- 3-foot, 4-pin to 4-pin cable
- 6-foot, 4-pin to 6-pin cable
- 6-pin to RS-232 serial interface adapter

The 3-foot cable connects two AutoStars, while the 6-foot cable connects an AutoStar and a PC using the interface adapter.

CAUTION: Do not connect either cable to the AUX port on the telescope's computer control panel or damage may occur to the cable connector.

TELESCOPE CONTROL

A powerful feature of AutoStar is that it serves as an interface between an astronomical software program, such as Meade AutoStar Suite Software and a Meade digital telescope.

NOTE: The software program must be compatible with the LX200-series telescope to be compatible with AutoStar.

To use this function, complete the following procedure:

1. Verify that telescope and computer power are OFF.
2. Connect the serial interface adapter (1, Fig. 1) to the RS–232 port on a PC.
3. Connect the 6-pin end of the 6-foot cable (2, Fig. 1) to the serial interface adapter, then the 4-pin end to the RS-232 port at the base of the AutoStar (3, Fig. 1).

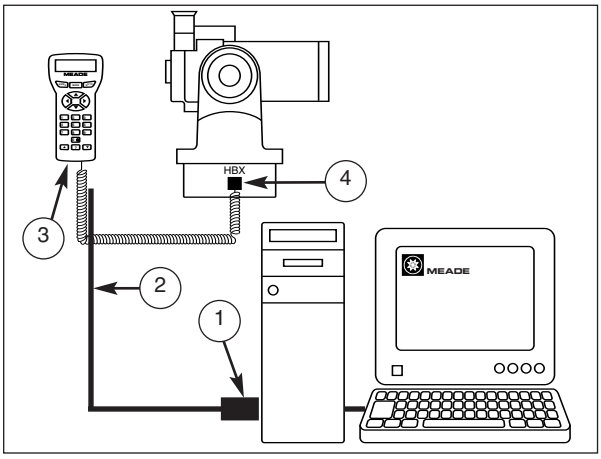

Fig. 1: #505 Connector Cable Set connects between a PC and AutoStar for telescope computer control or download capabilities. (1) Serial Interface Adapter; (2) 6-Foot Cable; (3) AutoStar; (4) Handbox (HBX) port on the telescope's computer control panel.

4. Connect the AutoStar coil cord between the HBX port (4, Fig. 1) on the telescope computer control panel and the coil cord connector port on AutoStar.
5. Apply power to the telescope and computer, then complete basic AutoStar initialization as detailed in the AutoStar instruction manual.
6. Be sure that the computer Com Port is configured to the following specifications:
   - Baud Rate **9600**
   - Data Bits **8**
   - Parity **None**
   - Stop bit **1**
   - Flow Control **None**
7. Complete telescope alignment as detailed in the AutoStar instruction manual.

Telescope control can now be accessed using a PC astronomical software program. Follow instructions provided with the software to provide PC telescope control.

NOTE: The AutoStar GO TO function is still active when connected to an astronomical software program, allowing control either from the PC or AutoStar.

DOWNLOAD FROM A PC

To download software or object information from a PC to AutoStar, follow this procedure:

NOTE: Downloading information is a two step process: First, information is downloaded from a web site to a PC; second, information is downloaded from the PC to AutoStar.

Download from the web site to the PC

1. From your PC, connect to the Meade web site (***www.meade.com***) to download an AutoStar file or files (*i.e.*, new software, orbital elements, etc.).
2. Follow the instructions from your web browser (*i.e.*, Internet Explorer, Netscape, etc.) on how to download a file from the Internet to the PC. Once downloaded, the data resides in a PC desktop program titled **AUTOSTAR UPDATE** (a **READ ME** file is also attached).

Download from the PC to AutoStar

1. Complete steps 1 through 6 of **TELESCOPE CONTROL**, then return to this procedure.
2. Open the **AUTOSTAR UPDATE** program on the PC.

*NOTE: All files downloaded from the web site to the PC do not have to be transferred to AutoStar (*i.e.*, software and orbital data may be downloaded to the PC, but you may choose to update the software now and the orbital data at a later time).*

3. Within the **AUTOSTAR UPDATE** program, select the file or files you wish to transfer and follow the instructions provided in the **READ ME** file.
4. When downloading is complete, AutoStar beeps and the initialization sequence begins. When complete turn off the power and disconnect the cables.

AutoStar downloading from a PC is now complete.

DOWNLOAD AND CLONE FROM AUTOSTAR

Use the following procedure to transfer information from one AutoStar (**Clone**) to another AutoStar (**Download**):

1. Verify that telescope power is OFF.
2. Connect each AutoStar to its respective telescope.
3. Connect the 3-foot cable (1, Fig. 2) between the RS-232 ports at the base of each AutoStar as shown in Fig. 2.
4. Apply power and complete basic initialization as detailed in the AutoStar instruction manual.

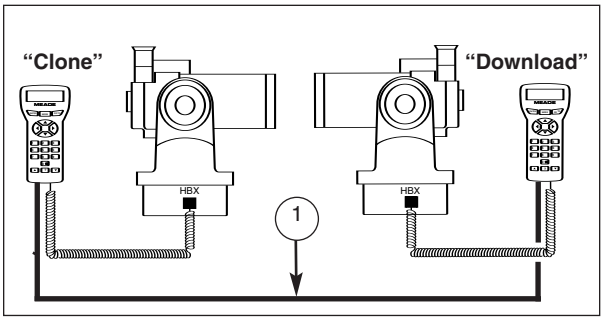

Fig. 2: #505 Connector Cable Set connects between two AutoStar handboxes. (1) 3-foot cable.

5. On the AutoStar that is to *receive* information:

   In the AutoStar **Setup** menu, scroll to the **Download** option and press ENTER. This warning appears on the screen:

   Downloading
   Do not turn off.

NOTE: This sets AutoStar into a standby mode.

6. On the AutoStar that is to *send* information:

   In the **Setup** menu, scroll to the **Clone** option and press ENTER. Scroll to one of three options:

   - **Catalogs:** Sends only the user-defined object information, such as new satellite orbital data, to another AutoStar.
   - **Software:** Sends only the basic AutoStar software. This is useful if your AutoStar is equipped with a new version of the AutoStar software (available from the Meade web site) and you want to download the new software to another AutoStar owner.
   - **All:** Transfers everything (*i.e.*, user-defined information and AutoStar software).

WARNING: Downloading *Catalogs* or *All* will overwrite any user-defined objects already in the AutoStar database. Do not download either of these options unless you wish to substitute new information from the cloning AutoStar for all existing user-defined information, such as orbital data on comets or satellites.

7. Press ENTER on the chosen option (**Catalogs**, **Software**, or **All**). The sending AutoStar starts to transfer information to the receiving AutoStar (set in the **Download** mode in step 5).
8. At the completion of the transfer, the sending AutoStar returns to the previous menu; the receiving AutoStar beeps and automatically starts the initialization sequence.
9. Complete the AutoStar initialization sequence, then turn off telescope power and disconnect the cables between AutoStar handboxes.

AutoStar cloning and downloading is now complete.

If you have a question concerning use of the #505 Connector Cable Set, call the Meade Instruments Customer Service Department at (949) 451-1450, or fax at (949) 451-1460. Customer Service hours are 8:00 AM to 5:00 PM, Pacific Time, Monday through Friday.

MEADE®
6001 Oak Canyon, Irvine, California 92618
(800) 626-3233 ■ www.meade.com

Ver. 0805

Part no. 14-4010-06